NOVEMBER 2026 - VAE Year 73

Wheel Tracks

John D. Parker III is pictured at the August 2026 Vermont Antique and Classic Car Meet in his 1921 Rolls-Royce Silver Ghost Tourer. He has attended the show a number of times with this vehicle. John has been a VAE member since 1954 and resides in North Stonington, Connecticut. **This Rolls-Royce has been driven over 200,000 miles!** His story begins on page 2.

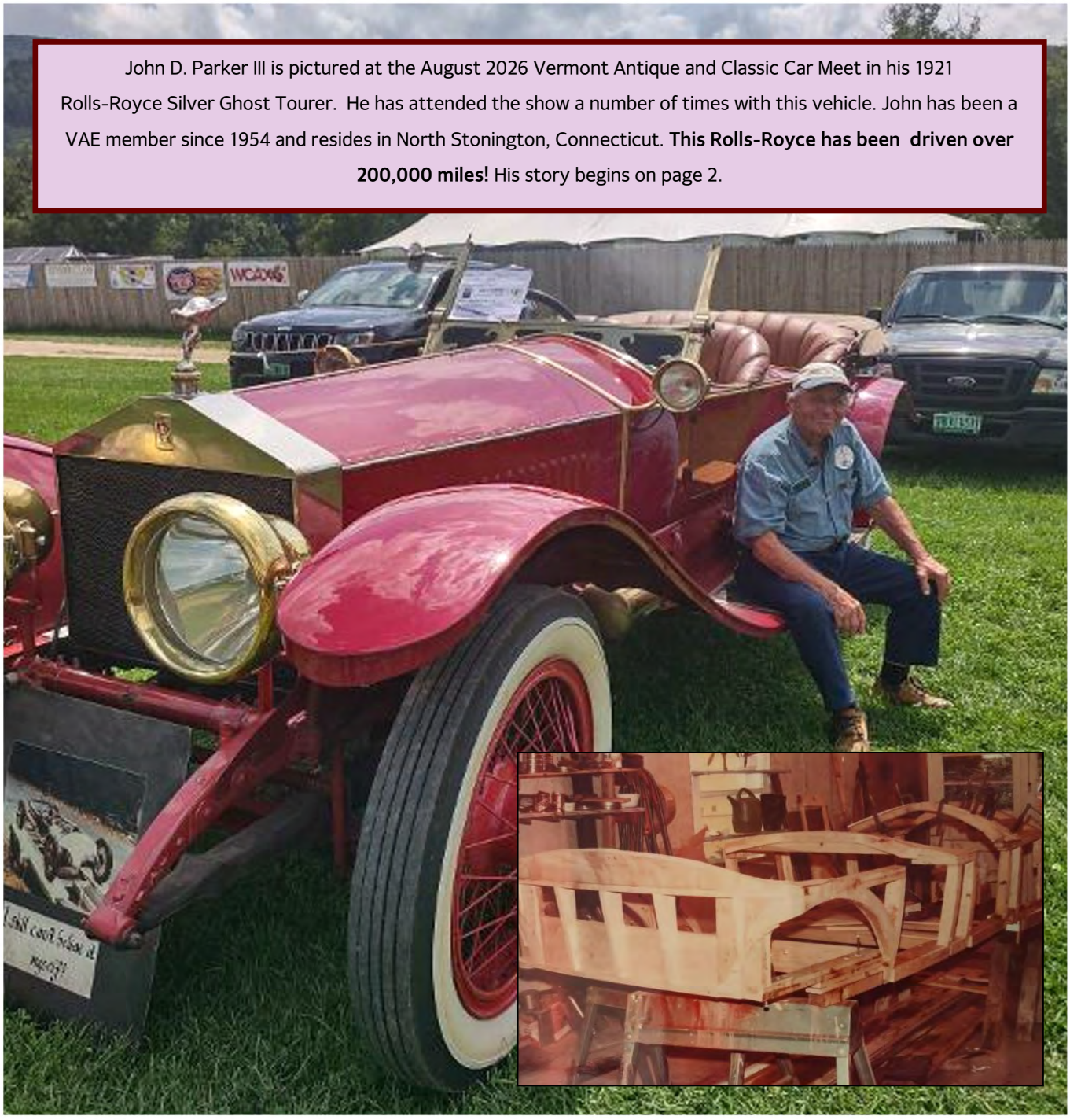

The Official Monthly Publication of the Vermont Automobile Enthusiasts

David Sander - Chairman
802-434-8418 **dasander@aol.com**
Jason Warren – President
802-477-2430 **jw790245@gmail.com**
Judy Boardman—1st Vice
802-899-2260
judyboardman@gmail.com
Don Pierce - Treasurer 802-879-3087
dpiercelightning@yahoo.com
Charlie Thompson - Recording Secretary 802-878-2536
charlieandmarion@comcast.net
Wendell Noble—Term ends 1/2027
802-893-2232
wnoble@myfairpoint.net
Eric Osgood - Term ends 1/2027
802-635-2138
eric.osgood@outlook.com
Ernie Clerihew - Term ends 1/2027
802-483-6871
britishjalopies@aol.com

Please pay dues to:
Christina McCaffrey, Member Secretary, 89 Ledge Road, Burlington, VT 05401-4140
VAEmembership@gmail.com
Or marleyparis@aol.com
To pay online, go to vtauto.org and click on "Renew Membership."

Education/Outreach Committee:

Ed Hilbert— Chair
Tom McHugh—Vice Chair
Wendell Noble—Secretary
Gary Olney
Nancy Olney
John Malinowski
Gary Fiske
Don Pierce
Charlie Thompson

Wheel Tracks Editors

Anne Pierce, 802-879-3087
fortherecordinvermont@gmail.com
Colchester, Vermont

&

Nancy & Ken Gypson, 518-423-7565
kengypson@yahoo.com
nancygypson@yahoo.com

The Vermont Antique and Classic Car Meet Chairperson:

Bob Chase 802-253-4579
rccwrn@stoweaccess.com

Justin Perdue-Webmaster

David Hillman– Welcome Committee

John Lavallee– Communications

Wheel Tracks Printer–Catamount Color, Essex, VT

Vermont Automobile Enthusiasts Website...

vtauto.org

FROM OUR PRESIDENT, JASON WARREN

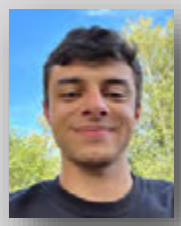

Hello,

I hope everyone is doing well and has taken time to relax after our show! We've worked really hard this year and deserve to enjoy time with family/friends.

With the colder months in full force, it has gotten me in the spirit of slowing down and appreciating the beauty of nature! Though we have to put our cars away, it is nice to have time for other adventures.

I, for one, am excited to accomplish things on my to-do list that I haven't had time for yet!

And in the spirit of things to do, please keep an eye on Wheel Tracks for upcoming events! A few changes in locations have taken place.

I hope to see you all soon!

Best,

Jason



About Us

We at Vermont Automobile Enthusiasts preserve the history and the vehicles of our automotive past. Since our beginning in 1953, our central mission has been to educate, and to enjoy our old vehicles and our wonderful membership. We are a 501c3 not-for-profit Inc. **Membership is $35 per year or $60 for 2 years. Become a member by clicking on "Join VAE" on our website, fill out the form and mail it with $s to our secretary. Or, pay online by clicking on "Renew Membership."**

Wheel Tracks monthly deadline to the editors is the 5th of each month.

Contact us at....
vaeinfo@gmail.com

Our website is....**vtauto.org**

John's 1921 Rolls-Royce

Back Story: Rolls-Royce Silver Ghost #83AG was built in Britain but sold new in USA in 1921 to Mr. Coe of Long Island and New York City. Originally ordered as a limousine, Mr. Coe decided on a six-light saloon (British for a four-door sedan). The car arrived in USA on 9/30/1921. Mr. Coe used the car regularly until 1928 when he acquired a new model, a 1928 Springfield Rolls-Royce Phantom 1. He gave the Ghost to his garageman, who decided to make the car over to a caravan/camper. The work was interrupted by the 1929 crash, which also killed his business. He pushed the chassis out back of the garage where it lay in the weeds until 1964 when Silver Ghost enthusiasts rescued the remains. He eventually sold it to Dr. John Goodman to be used as a parts car for his two 1913 Ghosts.



Front Story: During a gathering of car friends at John Goodman's Garage, I saw two chassis, one on top of the other. The top one got my attention. The bottom one was newer, having four-wheel brakes and other updates. John would not part with either one of them. But with my persistence and willingness to do him a big favor, he let me have the top chassis: #83AG. Actually, he gave it to me, but to make it legal, I had to pay him $1 (and other considerations as the deed reads). The real price was $1200, which was a number of boxes containing rare, impossible-to-find parts. The other chassis, #27TM, went to Adrian West of Morrisville and now belongs to Pierce Reid of Stowe.

(Continued on back cover)

Please scan this QR Code for New Membership and Membership Renewal.

Please scan this QR Code to donate to the Vermont Automobile Enthusiasts.

Next up……

2026 CALENDAR OF EVENTS

And always open to all members & guests!

NOVEMBER 7: ANNUAL MEETING ** NEW LOCATION ** Saturday, 11 AM—2 PM, St. Andrews Church Parish Hall, 109 S Main St., Waterbury, VT. Please bring a dish to share. Coordinator: Judy Boardman

DECEMBER 12: HOLIDAY PARTY ** NEW LOCATION ** Saturday at 11:30 AM at McGillicuddy's on The Green, 18 Severance Green, Colchester, VT. Coordinators: Charlie & Marion Thompson — Please see Page 7 for all the details.
DEADLINE TO RSVP is November 30, 2026.

ONGOING MONTHLY MEETINGS

VAE BOARD OF DIRECTORS' MEETINGS: April 16, July 16, October 15, 2026, at 6 PM. Fairfax Town Offices, 12 Buck Hollow Road, Fairfax, VT. All members are welcome and encouraged to attend!

EDUCATION & CHARITABLE OUTREACH COMMITTEE MEETINGS: Generally the 3rd Saturday of each month in Williston, VT, at 10 AM, 338 Commerce Street. Contact Chairman Ed Hilbert for meeting confirmation at 802-453-3743.

VERMONT ANTIQUE & CLASSIC CAR MEET COMMITTEE MEETINGS: 3rd Wednesday of each month at 7 PM, Revitalizing Waterbury, 46 So. Main Street, Waterbury, VT. Chairman: Bob Chase.



CARS & COFFEE

All of our beautiful cars should by now be buttoned up and put away for the long winter's nap with visions of salt-free roads dancing in their engines for the return of Cars & Coffee in May of 2027!

CARS & COFFEE MIDDLEBURY: First Saturday of each month at A&W, Route 7, Middlebury, VT. 8 AM–10 AM. Coordinator: Dave Stone. 802-598-2842.

WAITSFIELD CARS & COFFEE: First Sunday of each month at Mad River Exchange, 6163 Route 100, Waitsfield, VT. 9 AM—12 PM. Coordinator: John Lynch. 802-496-5251.

CARS & COFFEE VERMONT: Third Saturday of each month at University Mall, Dorset Street, So. Burlington, VT. 7 AM—9 AM. http://carscoffeevermont.com. Coordinator: John Malinowski. 802-662-1026.

Watch for John Lavallee's email messages for VAE news, reminders, and the latest planned events. Our website is VTAUTO.ORG.

DID YOU HAPPEN TO LOSE THIS OFF YOUR CAR AS YOU EXITED THE SHOW FIELD IN AUGUST?

A very nice lady stopped and picked it up, then mailed it to Chris & Laurel Barbieri hoping to find the owner.

Well, if you did lose it and want it back, reach out to me, Anne Pierce, at fortherecordinvermont@gmail.com and I'll see that it gets returned to you.

Thanks, Mrs. DuBose, of Richmond, VT, for taking the time to stop and pick it up off the road and then to mail it to the Barbieris.



Get a head start on your holiday shopping!



VAE items for sale!



HOODIES
Black or white
Sizes M—XXXL
$35 each plus shipping

CREW NECK T-SHIRTS
White or red
Sizes M—XXXL
$30 each plus shipping

LICENSE PLATES
$30 each including shipping



CONTACT:
Ally Felch
Email: allyfelch9@gmail.com
Cell: 802-793-3408

MEMBER SPOTLIGHT

ERIC OSGOOD

attended the annual Buick Club of America's annual meet in Albany, NY, this past August. In his own words, this is what he had to say:



"We did very well in the archival class, which is for all original cars. We got the elite trophy, which is a score of 385 or higher out of a total of 400 points. My car is a 1977 Buick Electra Limited, 49 years old and only 14,000 miles. Very original and in near perfect condition!"





A New Column: Do you have a VAE'er you'd like to recognize in *Wheel Tracks*? Just let Anne know the details.





"The Softer Side"



A Column Shared by Nancy Olney (Left), Judy Boardman (Center) & Anne Pierce (Right)

……..from Anne

Last April, while volunteering at my lapidary club's annual garage sale in Green Valley, Arizona, I was assigned to sort agates, crystals, and other stones of every shape and size. As I worked through more boxes than I could possibly finish, I found what looked like a chunk of colorful rock. I asked Laura McQuillen, who runs the club's dichroic glass program and whose work I greatly admire, what exactly I was holding.

Laura explained that in the late 1970s, when she was 18 and working on a General Motors assembly line, employees could take temporary jobs during the summer shutdown. She joined about 60 coworkers cleaning paint booths, where cars received their glossy finishes. Using three- to four-inch chisels and mallets, they scraped and peeled away layers of paint that had built up over the previous year. The hardened paint fragments became known as *Detroit Agate* at GM and *Fordite* at Ford; other names included *Motor City Agate* and *Cadilite*, associated with Cadillac. Lapidarists eventually discovered that the material could be cut and polished into jewelry cabochons, which are now highly prized worldwide.

Laura recalled that GM produced about 20 pink "Pink Pearl" Cadillacs each year for Mary Kay Cosmetics' top saleswomen across the country, and she described seeing that color pink emerge as they chipped away the paint as striking!

Whatever the name, these hardened paint layers captured the changing colors of the American auto industry.

Laura let me keep my "found" Detroit Agate; then she cut and polished it into the piece shown here. I may turn it into a keychain—or just keep it as a piece of automotive history. Alas, there's no Pink Pearl in it.





Bicycle Mechanics Made the First Gas Car in the U.S.
J. Frank and Charles Duryea, bicycle mechanics from Illinois, are credited with creating the first gas-powered automobile in the U.S. in 1893. They also won the very first automobile race in 1895.

95% Of A Car's Lifetime Is Spent Parked
Your car spends only 5% of its lifetime on the road. The rest of its lifetime will be spent parked overnight or while not in use.



Wheel Tracks Academy



By "Professor" Wendell Noble

The Alternator Alternative

As long as automobiles have used electricity to power anything other than ignition, they have required a means of generating DC power to replenish the battery. In 1912, Cadillac introduced the first DC generator (dynamo) for this purpose. It served that function for nearly six decades. In 1960, Chrysler introduced the first alternator as an electrical power source which was quickly adopted by the entire industry.

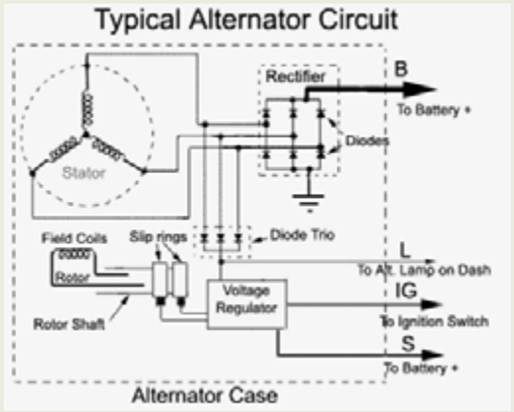

The alternator is based on the same electrodynamic principle as the generator. An electric current is induced in a wire as it passes through a magnetic field. It has some important differences, however. In an alternator, the magnetic field is created by windings on the rotor while the armature winding, called the stator, is stationary and fixed to the case surrounding the rotor. Connection to power the rotor windings from the battery are made by slip rings on the shaft which are in continuous contact with brushes. Thus, the magnetic field is rotating and the stator wires are stationary, producing the same electrodynamic effect.

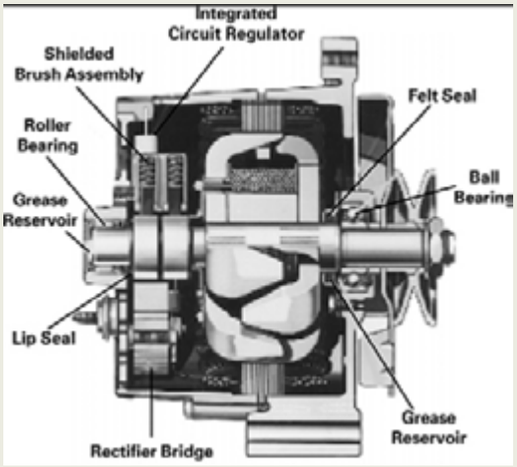

There are three separate stator windings arranged in what is referred to as a "Y" configuration. As a result, the alternator produces a three-phase alternating current with the phases 120 degrees apart. These AC currents are converted to DC by a diode bridge circuit. A diode is a circuit component which allows current to flow in one direction only. What made the alternator practical for automotive use was the development of semiconductor diodes simple and small enough to be integrated into the alternator case.

The advantage of an alternator over a dynamo-type generator is that the alternator can be regulated to produce an output current level nearly independent of engine speed. This is achieved by regulating the current from the battery to the rotor windings. The regulator consists of a solid-state circuit, usually built into the alternator case. It monitors the voltage level of the battery and adjusts the rotor current which produces the magnetic field so as to maintain the voltage between 13.5 and 14.5 volts, even at low engine speed.

Us old car folks have very likely had occasion to disassemble an old DC generator, view its internal parts, and make any needed repairs. Not so likely with an alternator. We wouldn't be able to fix anything and, fortunately, due to its reliability, we won't need to.



Dear Editors:

I received *Wheel Tracks* yesterday at dinnertime and was much surprised to see my letter on the front cover of our magazine. At first, it made me a bit uncomfortable. But as I re-read it, I understood that it was not at all about me. It was about the annual Show and especially about all the folks who do the real work. This issue was one of the best ever, and it seemed a fitting tribute to all the people who support and perpetuate our hobby. I loved the piece with great photos by Eric Osgood, the tribute by Ken Green, and, as always, Wendell Noble's column. Thank you for a great magazine -- well done!

John Emerson

John is a VAE member and lives in Middlebury, VT.

"Remember When?".... with Chris Barbieri



This quarter page ad appeared in the May 1935 issue of *The National Geographic Magazine*. It was a sort of a "Vermont Page" as it also included a half page advertisement for Rock of Ages Memorials. This year, Vermont probably didn't need any ads to "come and tarry" - the spectacular fall colors speak for Vermont's "Grandeur!" Hope you had a chance to tour the fall foliage too!

Remember When?

Saturday
December 12

McGillicuddy's
On The Green

18 Severance Green
Colchester, VT



Arrival time: 11:30 AM for socializing, with buffet luncheon at 12 PM.

Directions for parking: Entrance to restaurant is off Blakely Rd.

RESERVATIONS must be made by November 30 by sending a check for $30 per person to Charlie Thompson, 272 Colchester Pond Rd., Colchester, VT 05446. Please specify your preference for Grilled BBQ Chicken Breast, Shepard's Pie or Baked Ziti.

The Gift Exchange is back this year!!! If you'd like to join in the fun, please bring a wrapped gift (please, no more than $20) to participate.

Contact our coordinators, Charlie & Marion Thompson, at 802-878-2536 or charlieandmarion@comcast.net with any questions.

Come and join in the relaxed fun time as we VAEers kick off the holiday season!



IN THE DRIVER'S SEAT

With Guest Columnist Buzz Stone



I am writing this article on late model racing at Catamount Race Track in Milton, VT, in the '70s and '80s.

My wife, Sandy, and I lived in Essex Junction from 1971 through 1986. We had three children and lived in a small neighborhood of great neighbors. We got into automobile racing as fans. A neighbor of ours ran an auto repair shop on the Colchester Road in Essex Junction; Tom Tiller. Tom, known as "the Kentucky Colonel," raced car number 77. Yellow Dodges were his choice. On race day, his trailer with race car would be parked in his front yard for a few hours sometimes and all the kids would go over and have a blast. We would go to the track very early on race day. Tom would take the older kids for a ride around the track. Yes, I have pictures of that. Yes, the good old days.

Well, one of our daughters had a birthday. Sandy made her a cake like a race car, with Tiller markings, and we invited Tom and his wife and kids to the "party." Great fun. I have photos of that.

Unfortunately, that was 50 years ago and my memory is getting fuzzy on remembering all the drivers in those days, but I have a few that stick with me: Bobby Dragon drove the number 71 and his brother, Beaver Dragon, was also a driver, driving car 75, both amongst the best of the drivers. Beaver Dragon used to fish a lot up off of Georgia Shores/Savage Island area. He had the various reef and fish finder gadgets in his boat. Trolling for Walleye Pike. I would follow behind him many times and reap the benefits of his technology. Successful fishing for Walleye, anyway!

Another driver of note was Jean-Paul Cabana. He was the elite driver of the track. He would arrive in a beautiful semi. Inside were two complete race cars, 5 and 5-A. Beautiful blue and white cars. Engines, all the spare parts needed. A shop in a truck. He won the first and last race at Catamount Stadium in Milton in 1987.

I am so happy that the racing community is part of the Waterbury VAE Antique and Classic Car Meet. Nice to see the old late models. And the flatheads, street stocks, and coupes.

Yes, and then there is Ron Barcomb, driver of the 09 car. Dave Dion in the 29 car, known mostly for his exploits at Thunder Road but also Catamount, Airborne, and other nearby tracks. How about Stub Fadden from NH driving the 16 car. Oh yes, Hector LeClair, the racing contractor from Fairfax, in the 59 car!

So many. Robbie Crouch, and I think it was Richie Panch, who came up from down south to stay with Tillers for a few weeks each summer. Glad these guys, and so many more, are part of our Waterbury Show.

Buzz and Sandy are long-time VAE'ers who are also snowbirds between VT and FL.

The Peel P50—The World's Smallest Production Car



Peel P50 (1962): This tiny three-wheeler is the smallest production car ever made. It holds one person and lacks a reverse gear, meaning you have to physically pick it up by a handle at the back to turn it around. It was made by the Peel Engineering Company on the Isle of Man (which is located in the middle of the Irish Sea, right between Great Britain and Ireland) from 1962 to 1965 and then resurrected in 2010 and is still being made today. Price you ask? $18,000 to $21,000.

You too can own one with either gas or electric drivetrains. It comes as a fully assembled factory build or as a do-it-yourselfer assembly kit. Oh, and the new versions have legal improvements like a functioning reverse gear.

FROM MEMBERS AFAR...
By VAE members Bruce and Margaret Levitch
Gilbert, Arizona

CAR SHOW DEVELOPED OVER LUNCH!

Over the 4th of July weekend in 2004, we visited our favorite Mexican restaurant. When entering the establishment, we encountered the owner and asked where all the customers were. He stated that business had been slow for the shopping plaza. We sat down and ordered our meal. The owner came by again to ask us how everything was. I responded, "Did you ever think of having a car show at the plaza?" He responded that it had not ever entered his mind.

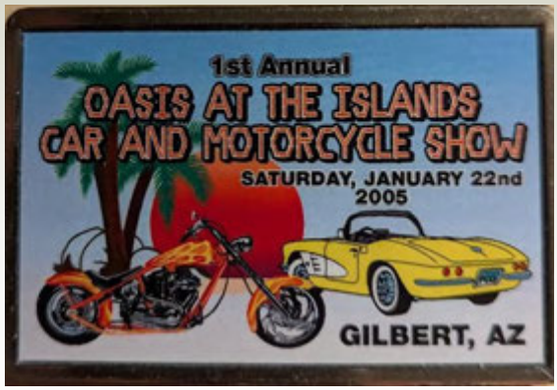

I told him I had many contacts and we could pull off a great car show offering cash prizes for awards. My brother and I had shown our Corvairs in many car shows in Arizona as well as out of state. During these events I had collected names and addresses of my fellow car enthusiasts over the past years. The restaurant owner was also the president of the merchants' association. He agreed on a January 2005 date in Gilbert, Arizona. **The 1st Annual Oasis at the Islands Car and Motorcycle Show was born.**

During this whole development stage, no permits or police coverage was necessary. The merchants' association agreed on having a remote broadcast by the local favorite FM station in the Valley of the Sun. They were secured for a short broadcast at the plaza where the car show was to take place.

My brother and I secured specialized vendors relating to classic cars as well as clothing, jewelry, auto engine builders, car detailers, and classic car insurance representatives. Handwritten letters went out with flyers to over 250 classic car owners as well as 60 classic car clubs in four states. I applied to the major manufacturers for car show products such as waxes, polishes, gloves, and car polishers. It was a big surprise when pallets of merchandise arrived at my residence in Gilbert, Arizona. Some of this merchandise was placed in the goody bags each participant received with their entry fee of $25.



Set-up started at 5 AM on that morning. We got the vendors placed in their locations. They offered discounts to the entrants for their services. We had golf carts and mobile radios to communicate with the many volunteers that day. We opened for registrations at 6 AM. We had a line of cars waiting to enter the show from numerous states. **What sparked the attention of the classic car owners was that we were giving out cash awards instead of trophies for the show.** The amounts given were $700, $500, $350, and $200. The feedback indicated that they appreciated the money instead of trophies like other shows they had attended.

The radio station was live from 11-2 PM at the show. Crowds were estimated at 20,000 people with over 200 classic cars and motorcycles. TV and radio stations broadcasted the location of the show. Interviews and pictures were live.

In conclusion, the plaza stands today with continued business and all parties walked away very happy!



Pictured right is Bruce's
1967 Corvair Monza

Burma-Shave The End

By Charlie Thompson



You might guess, correctly, that the Burma-Shave folks didn't write that one. But, yes, the signs have been gone since the early 1960's. Many explanations have been proposed, and it's likely a combination of many.

In 1948, the in-house paper, *The Burma Sign Post*, reported decreasing sales and rising costs, prompting the company officers to take a cut in salary. During the next 7 years, the company experimented with other forms of advertising: radio, TV, and print, producing no new jingles. Roads were improving and cars were faster. Cities, with many potential customers, were spreading with suburban development, depleting straight stretches of open roadside. The new interstate highways with their wide rights-of-way, high speeds, and rules in many areas prohibiting roadside advertising, carried traffic off the two lanes where the little red signs were effective.

As the 1960's approached, more money was diverted from the signs to radio, TV, and print. In 1963, it was announced that the Burma-Vita Company was sold to Phillip Morris to become a division to its subsidiary, American Safety Razor Products. The decision to gradually reduce the number of signs was accelerated. The trucks, still painted "Cheer up/Face/The war/Is over/Burma-Shave," were sent out one more time to remove the signs, uproot the posts (or cut them off if removal was not possible), and eliminate all evidence of the signs. Some were given to the landowners, some to local museums, and one set to the Smithsonian. Several farmers were sad to see them go, noting, "It's like losing an old friend." So many articles, stories, and farewell celebrations followed that they eclipsed previous news events like torn-off fenders and Frenchie's trip to Mars. To the Smithsonian went one of the O'Dell Family favorites:

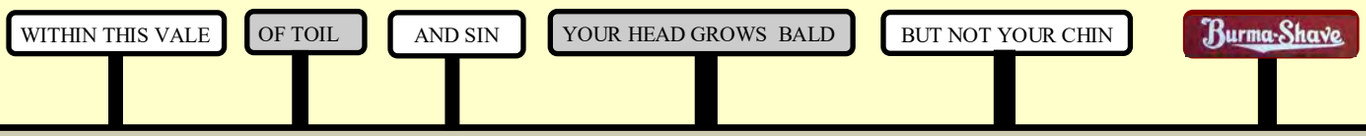



What do you call a turkey on the last day of November?
Relieved.
Why did Mom's turkey seasoning taste off?
She ran out of thyme.
What was the turkey suspected of?
Foul play.
What is a pumpkin's favorite sport?
Squash.
What did the ocean say when it saw the Mayflower?
Nothing. It just waved.
What do you call a turkey running on a football field?
Lost.
What do turkeys drink fine wine from?
Goblets.

Wheel Tracks Classifieds

Bumper Sticker of the Month...

I was an honor roll student;
I don't know what happened.

FOR SALE...Gael Boardman's 1929 Chevrolet Roadster. More information in the Sept. 2019 issue of WT. $12,000.

Contact Judy Boardman at 802-899-2260 or judyboardman@gmail.com



FOR SALE...1965 VW Bus Type II
A restoration project ready for your completion! Most parts are present but not installed… $25,000 OBO.





1967 VW Beetle
Runs well; clean inside and out; older restoration but in good shape! $17,500



1951 Kaiser Deluxe
Last registered 2017; garaged since…$7,000 OBO.
Contact Kim at kimslaven33@gmail.com
207-266-1970
(Cars formerly owned by long-time VAE Member Ken Taplin)

FOR SALE…. A COMPLETE set of Collectible Automobile magazines, starting with June 1984 and publishing 6 issues per year. Excellent condition. High quality photography and no advertising. One year (6 issues) at $10 or complete set of 42 years (252 issues) at $250. John Emerson jemerson@middlebury.edu. 802-388-7826

FOR SALE...1947 Harley Davidson WL-45, completely restored, flight red. 1,000 miles since restoration, show machine, runs as good as it looks, easy starting. Original 1947 Harley sales paper and original 1946 Enthusiast magazine showing the new 1947 models. Restored to factory specs. Photos and receipts from the restoration go with it. Geared to go over the road. New battery. Asking $23,000 or best offer. **MUST SELL!** Fred Gonet,
Shop 802-226-7844,
Home 802-226-7709.



WANTED... Four 16" steel wheels for 1950s Jeep. Call Hank Baer, 802-272-6933.

FOR SALE… 1956 Plymouth Plaza, 100% restored.





1956 Meteor, Fully restored like new. 21,000 $ CAD.







Three modified Ford cars. Excellent.
gbureau@videotron.ca (Montréal QC.)



FOR SALE... Ford Model A, 1930, Excellent condition, Stored in Colchester, more photos available, $18,000 negotiable.

Call Nan Oleary (802) 238-0999 or Charlie Thompson (802) 734-4010.

FOR SALE... Garage attic full of old car parts! Model T, VW, Kaiser, Porsche engine… Inherited from my late father. Anyone interested in buying the lot? Kim Slaven, Blue Hill, Maine.
kimslaven333@gmail.com, 207-266-1970

FOR SALE...1997 BMW Z3, Atlanta Blue, mileage: 71,000, automatic, 4 cylinder, $16,000.
Contact:
Melinda Vieux
802-454-8423
mvieux13@gmail.com
191 Main St, Plainfield, VT



The Roadside Diner



Cheesy Sausage Biscuit Casserole

12 baked biscuits, crumbled
1 pound breakfast sausage, cooked and crumbled
6 eggs
2 cups whole milk
1 can condensed cream of mushroom soup
1 tablespoon dry mustard
2 cups shredded sharp cheddar cheese



Nancy Gypson

In greased 9 x 13 pan, layer crumbled biscuits and crumbled sausage. Combine and whisk the rest of the ingredients and pour over biscuits and sausage. Bake in preheated 350 degree oven for 35-40 minutes or until edges are browned and center is no longer jiggly. Let rest for 5 minutes and cut into squares. This can be made ahead and refrigerated for up to 8 hours.

HAPPY VETERANS DAY
"Our debt to the heroic men and valiant women in the service of our country can never be repaid." - *Author Unknown*



Carl Hamel's 1964 Ford Thunderbird
Winner of the Canadian Friendship Award and
Best of Show Post-War
August 2026

I heard that memory foam pillows were on sale for Black Friday, but I can't remember where.

VERMONT AUTOMOBILE ENTHUSIASTS

NOVEMBER 2026

203 Colchester Pond Road
Colchester, VT 05446

Return Postage Guaranteed

Attention….. The date printed after your name is when your VAE Membership expires.

John's 1921 Rolls-Royce, continued from page 2

83AG sat in my garage for four years for research and development and a promise to finish the upstairs of the house first! At that point the car was disassembled, what there was of it. The frame was cleaned, painted, and hung like a ladder in the garage. This gave me room to work on the chassis components. There was not a lot of wear on the suspension, but rotating parts needed a lot of attention once they were rebored, rebearinged, adjusted and set right. They were painted, cataloged and hung away.



The engine was then addressed. It needed everything! It was degreased, cleaned up, and all parts inspected. The bores were clean and round meaning we could still use the original pistons. The shaft was line bored, and all new babbit for mains and rods. The valve lifting gear and system needed much work – there were so many bits! But all the bits were not with the engine. There was no water plumbing. The outside oil pipes were also missing. We had to make all this stuff from scratch. This meant wooden patterns, special castings, and line boring the exit water pipe to the radiator, which wasn't done yet. This went together with the vertical outlets from the top of the blocks – two of them were needed and I had only one. With many letters and phone calls, I was put in touch with Gordon Morris in Upstate New York. He had three blocks; two were a pair in decent shape, but he wouldn't break up the pair. The third one was probably ok, but very rusty. Hobson's Choice: I took the rusty one. When I got it home, I sat it on top of the crankcase just behind the one I had. Something caught my eye – the rust pattern and scuff scratches were nearly identical to those on the front block! Further investigation satisfied me that this block was indeed from my car, but how it got to where it was was anyone's guess.

At last came the exciting time of assembly. The various pieces went together fairly easily except for one thing – a radiator, didn't have one. Rescued again by providence, this time by my late friend Curtis L. Blake, co-founder of Friendly's Ice Cream. He had just acquired a 1913 Silver Ghost out of Nirobi. He intended to recoach the chassis with a replica body trimmed all in brass, including the radiator. He gave me his that came with the chassis. It's low profile provided the height of the yet-to-be-built body.



The body was a product of one line drawing, several sketches, and a good imagination. Framed in red oak, the body took shape pretty much as you can see in the accompanying pictures. The frame is covered with aluminum, cut from cardboard cut-and-paste patterns and hand-formed over the wood. The fenders were made professionally following my design. Making the top was a trial and error exercise lasting 3 weeks, but that is another story. When it was finished in 1980, it appeared as you see it on the cover. The car has been driven a little over 200,000 miles on sheer joy, outside of a few mechanical interruptions. It is no longer the pristine 100 pointer but still cuts a nice presentation everywhere it goes.